Released on 8/18/2021

PRINTED COPY OF THIS DOCUMENT IS FOR REFERENCE ONLY AND IS UNCONTROLLED

THE INFORMATION CONTAINED IN THIS DRAWING IS THE SOLE PROPERTY OF APICAL INDUSTRIES DBA DART AEROSPACE. ANY REPRODUCTION IN PART OR WHOLE WITHOUT THE WRITTEN PERMISSION OF APICAL INDUSTRIES DBA DART AEROSPACE IS PROHIBITED.

REVISIONS

REV.	DESCRIPTION	DATE	APPROVED
A	INCORPORATED ECN 02461	06-29-09	P. BRAVO
B	INCORPORATED ECN 02660 AND 02823	04-20-10	P. BRAVO
C	INCORPORATED ECN 02862, 02609, 03152, AND 03170	07-11-11	P. BRAVO
D	INCORPORATED ECN 03496 AND 04135	10-14-13	P. BRAVO
E	INCORPORATED ECN 04578, 05379, AND 05736	05-01-17	P. BRAVO
F	INCORPORATED ECN 05938	02-22-18	P. BRAVO
G	INCORPORATED ECN 06008	07-06-18	P. BRAVO
H	INCORPORATED ECN 06365	08-29-19	P. BRAVO
J	INCORPORATED ECN 06445	01-28-20	J. GARDINER
K	INCORPORATED ECN 06463	03-12-20	J. GARDINER

PROTOTYPE REVISIONS

ZONE	REV	DESCRIPTION	DATE	APPROVED	CHANGE CODE	EFFECTIVITY	REVISED BY
SHEET 1 A3-2 A8-2 B1-2 B3-2 C3-2 D3-2 B3-3 B8-3 C3-3 D3-3 SHEET 4 SHEET 5 SHEET 6 SHEET 7 SHEET 8 SHEET 9 SHEET 10	PK1	ADDED SHEET 1 FOR PROTOTYPE REVISION TABLE F/N 36: P/N WAS 601.2587 IS MS16624-4037 F/N 35: P/N WAS 600.0741 IS NAS620C6 F/N 34: P/N WAS 601.2591 IS MS35275-211 F/N 33: P/N WAS 601.2939 IS MS28775-011 F/N 32: P/N WAS 601.2937 IS MS28775-008 F/N 31: P/N WAS 601.1084 IS NAS1611-006A F/N 30: P/N WAS 601.2936 IS MS28775-007 F/N 28: P/N WAS 601.2582 IS NAS1149C0663R REMOVED MAT'L AND SPEC NOTES REVISED NOTES F/N 24: P/N WAS 645.7513 IS 650.6513 F/N 23: P/N WAS 645.7510 IS 650.6510 F/N 23: DESCRIPTION WAS BURST DISC RETAINER IS BURST DISC ADAPTER F/N 20: P/N WAS 601.2241 IS M83461/2-902 F/N 19: P/N WAS 600.0289 IS 654.6412 F/N 18: P/N WAS 600.0288 IS 654.6411 F/N 17: P/N WAS 600.0260 IS 654.6410 F/N 16: P/N WAS 645.7511 IS 650.6511 F/N 16: ADDED QUANTITY OF 1 FOR .5902 AND .5903 CONFIGURATIONS F/N 15: P/N WAS 645.7512 IS 650.6512 F/N 14: DELETED (REPLACED 600.0258 WITH 601.3739) F/N 13: P/N WAS 601.1567 IS MS28775-012 F/N 12: P/N WAS 601.3001 IS M83461/2-905 F/N 12: ADDED QUANTITY OF 1 FOR ALL CONFIGURATIONS EXCEPT FOR .5901 AND .5914 F/N 11: P/N WAS 645.6401 IS 650.6301 F/N 6: P/N WAS 600.0262 IS MS19060-1012 ADDED 645.5916 CONFIGURATION ADDED F/NS 72, 73, 74 F/N 71: P/N WAS 601.4369 IS 601.4370 F/N 70: P/N WAS 652.4801 IS 601.4403 F/N 69: ADDED QUANTITY OF 1 FOR 645.5913 CONFIGURATION F/N 67: ADDED QUANTITY OF 1 FOR .5901-.5912 CONFIGURATIONS F/N 66: P/N WAS 601.1876 IS MS20995C20 F/N 66: QUANTITY WAS .5 FT IS A/R FOR ALL CONFIGURATIONS F/N 65: P/N WAS 645.7515 IS 650.6515 F/N 64: DELETED (REPLACED 601.3402 WITH M83461/2-904) F/N 63: P/N WAS 601.1090 IS M83461/2-906 F/N 62: P/N WAS 601.1088 IS M83461/2-904 F/N 62: REVISED QUANTITIES FOR ALL CONFIGURATIONS REMOVED MAT'L AND SPEC NOTES F/N 60: DELETED (REMOVED DECAL FROM ASSEMBLY) F/N 59: DELETED (REMOVED DECAL FROM ASSEMBLY) F/N 57: P/N WAS 601.0761 IS 601.2173 F/N 56: P/N WAS 600.0294 IS 654.6512 F/N 55: P/N WAS 601.1674 IS 654.6511 F/N 54: P/N WAS 601.2382 IS 654.6510 F/N 51: P/N WAS 601.1091 IS M83461/2-910 F/N 51: ADDED QUANTITY OF 1 FOR ALL CONFIGURATIONS F/N 47: P/N WAS 601.2940 IS M83461/2-908 F/N 46: P/N WAS 645.6402 IS 650.6302 F/N 45: P/N WAS 601.2946 IS MS35650-364 F/N 44: P/N WAS 645.6312 IS 650.6212 F/N 43: P/N WAS 645.6311 IS 650.6211 F/N 42: P/N WAS 645.6310 IS 650.6210 F/N 40: P/N WAS 601.2840 IS NAS1352C06-16 F/N 39: P/N WAS 601.2841 IS NAS1352C06-12 F/N 38: P/N WAS 601.2590 IS MS28775-022 ADDED 645.5916 CONFIGURATION COMPLETELY REVISED SHEET COMPLETELY REVISED SHEET (SPLIT VIEWS BETWEEN THIS SHEET AND PREVIOUS SHEET) COMPLETELY REVISED SHEET ADDED NEW SHEET FOR EXPLODED VIEWS ADDED NEW SHEET FOR EXPLODED VIEWS ADDED NEW SHEET FOR EXPLODED VIEWS ADDED NEW SHEET FOR EXPLODED VIEWS	03-23-21	J. GARDINER	MDI	NEXT ORDER	K. TAILOR

ORIGINAL DATE (MO-DA-YR) 01-22-07	DART AEROSPACE APICAL INDUSTRIES, INC. dba DART AEROSPACE 3030 ENTERPRISE CT., SUITE A VISTA, CA. 92081 (760)-724-5300
DRAWN BY E. ANDERSSON / CHECKER P. BRAVO	
DRAWING APPROVAL P. BRAVO 01-22-07	
CONTRACT No.	VALVE ASSEMBLY
UNLESS OTHERWISE SPECIFIED DIMENSIONS ARE IN INCHES TOLERANCES ARE: 2 PLACE DECIMALS ±.01 3 PLACE DECIMALS ±.005 ANGLES ± .5°	SIZE B · CAGE CODE 07MZ6 · DWG. NO. 645.5900 · REV. PK1 SCALE NONE · SHEET 1 OF 10

Released on 8/18/2021

PRINTED COPY OF THIS DOCUMENT IS FOR REFERENCE ONLY AND IS UNCONTROLLED

THE INFORMATION CONTAINED IN THIS DRAWING IS THE SOLE PROPERTY OF APICAL INDUSTRIES DBA DART AEROSPACE. ANY REPRODUCTION IN PART OR WHOLE WITHOUT THE WRITTEN PERMISSION OF APICAL INDUSTRIES DBA DART AEROSPACE IS PROHIBITED.

NOTES:

1. ASSEMBLE IAW MPP-169

2 (in triangle) LASER ENGRAVE OR DOT MARK VALVE P/N, S/N, AND REVISION ONTO THE 645.6110 VALVE BODY IAW MPP-120

3 (in triangle) LASER ENGRAVE OR DOT MARK PORT POSITION CODE, IAW TABLE 2, ONTO THE 647.2910 SPRING CAP IAW MPP-120

4. REFER TO SHEETS 8-10 FOR CONFIGURATION SPECIFIC VIEWS

5 (in triangle) QTY (1) EXTRA M83461/2-910 O-RING REQUIRED FOR POST LEAKAGE TEST ASSEMBLY

PK1

.5916	.5915	.5914	.5913	.5912	.5911	.5910	.5909	.5908	.5907	.5906	.5905	.5904	.5903	.5902	.5901	F/N	P/N	DESCRIPTION	MAT'L	SPEC
1	1	1	1	1	1	1	1	1	1	1	1	1	1	1	1	36	MS16624-4037	SNAP RING		
5	5	5	5	5	5	5	5	5	5	5	5	5	5	5	5	35	NAS620C6	WASHER		
1	1	1	1	1	1	1	1	1	1	1	1	1	1	1	1	34	MS35275-211	SCREW		
1	1	1	1	1	1	1	1	1	1	1	1	1	1	1	1	33	MS28775-011	O-RING		
2	2	2	2	2	2	2	2	2	2	2	2	2	2	2	2	32	MS28775-008	O-RING		
1	1	1	1	1	1	1	1	1	1	1	1	1	1	1	1	31	NAS1611-006A	O-RING		
1	1	1	1	1	1	1	1	1	1	1	1	1	1	1	1	30	MS28775-007	O-RING		
1	1	1	1	1	1	1	1	1	1	1	1	1	1	1	1	29	651.9910	BAYONET		
1	1	1	1	1	1	1	1	1	1	1	1	1	1	1	1	28	NAS1149C0663R	WASHER		
1	1	1	1	1	1	1	1	1	1	1	1	1	1	1	1	27	600.0318	PLUNGER		
2	2	2	2	2	2	2	2	2	2	2	2	2	2	2	2	26	601.1083	O-RING		
1	1	1	1	1	1	1	1	1	1	1	1	1	1	1	1	25	600.0266	FUSIBLE PLUG		
1	1	1	1	1	1	1	1	1	1	1	1	1	1	1	1	24	650.6513	THERMAL ADAPTER		
1	1	1	1	1	1	1	1	1	1	1	1	1	1	1	1	23	650.6510	BURST DISC ADAPTER		
1	1	1	1				1	1	1				1	1	1	22	600.0248	SAFETY DISC		
				1	1	1				1	1	1				21	600.0250	SAFETY DISC RETAINER		
1	1	1	1	1	1	1	1	1	1	1	1	1	1	1	1	20	M83461/2-902	O-RING		
1	1	1	1	1	1	1	1	1	1	1	1	1	1	1	1	19	654.6412	FILL PISTON FITTING		
1	1	1	1	1	1	1	1	1	1	1	1	1	1	1	1	18	654.6411	PLUG FITTING		
1	1	1	1	1	1	1	1	1	1	1	1	1	1	1	1	17	654.6410	FILL PORT		
1	1	1	1	1	1	1	1	1	1	1	1	1	1	1	1	16	650.6511	FILL PORT ADAPTER		
			1							1	1	1	1	1	1	15	650.6512	GAUGE ADAPTER		
																14	DELETED			
3	3	3	3	1	3	3	1	3	3	1	3	3	1	3	3	13	MS28775-012	O-RING		
2	2	1	2	2	2	2	2	2	2	2	2	2	2	2	2	12	M83461/2-905	O-RING		
1	1	1	1		1	1		1	1		1	1		1	1	11	650.6301	SWIVEL FITTING ASSEMBLY		
1	1	1	1	1	1	1	1	1	1	1	1	1	1	1	1	10	600.0259	PUNCTURE DISC		
1	1	1	1	1	1	1	1	1	1	1	1	1	1	1	1	9	645.6510	PUNCTURE DISC RETAINER		
1	1	1	1	1	1	1	1	1	1	1	1	1	1	1	1	8	647.2910	SPRING CAP		
1	1	1	1	1	1	1	1	1	1	1	1	1	1	1	1	7	647.3010	TRIGGER PISTON		
1	1	1	1	1	1	1	1	1	1	1	1	1	1	1	1	6	MS19060-1012	TRIGGER BALL		
1	1	1	1	1	1	1	1	1	1	1	1	1	1	1	1	5	645.7710	SHROUD		
1	1	1	1	1	1	1	1	1	1	1	1	1	1	1	1	4	645.6910	PULL ROD		
1	1	1	1	1	1	1	1	1	1	1	1	1	1	1	1	3	645.6810	PULL ROD HOUSING		
1	1	1	1	1	1	1	1	1	1	1	1	1	1	1	1	2	645.6210	BAYONET HOUSING		
1	1	1	1	1	1	1	1	1	1	1	1	1	1	1	1	1	645.6110	VALVE BODY		
X																	645.5916	ANGLED GAUGE VALVE ASSEMBLY -4		
	X																645.5915	VALVE ASSEMBLY -4 W/ THERMOMANOMETER		
		X															645.5914	VALVE ASSEMBLY -4		
			X														645.5913	VALVE ASSEMBLY -4 (6000 PSI)		
				X													645.5912	VALVE ASSEMBLY -8 LOW		
					X												645.5911	VALVE ASSEMBLY -6 LOW		
						X											645.5910	VALVE ASSEMBLY -4 LOW		
							X										645.5909	VALVE ASSEMBLY -8		
								X									645.5908	VALVE ASSEMBLY -6		
									X								645.5907	VALVE ASSEMBLY -4		
										X							645.5906	VALVE ASSEMBLY -8 LOW		
											X						645.5905	VALVE ASSEMBLY -6 LOW		
												X					645.5904	VALVE ASSEMBLY -4 LOW		
													X				645.5903	VALVE ASSEMBLY -8		
														X			645.5902	VALVE ASSEMBLY -6		
															X		645.5901	VALVE ASSEMBLY -4		

QTY | PARTS LIST

NEXT ASSY (S)
646.7400
646.7500
650.2300

ORIGINAL DATE (MO-DA-YR) 01-22-07
DRAWN BY E. ANDERSSON | CHECKER P. BRAVO
DRAWING APPROVAL P. BRAVO 01-22-07
CONTRACT No.

UNLESS OTHERWISE SPECIFIED DIMENSIONS ARE IN INCHES
TOLERANCES ARE:
2 PLACE DECIMALS ±.01
3 PLACE DECIMALS ±.005
ANGLES ± .5°

DART AEROSPACE
APICAL INDUSTRIES, INC. dba DART AEROSPACE
3030 ENTERPRISE CT., SUITE A
VISTA, CA. 92081
(760)-724-5300

VALVE ASSEMBLY

SIZE B | CAGE CODE 07MZ6 | DWG. NO. 645.5900 | REV. PK1

SCALE NONE | SHEET 2 OF 10

Released on 8/18/2021

PRINTED COPY OF THIS DOCUMENT IS FOR REFERENCE ONLY AND IS UNCONTROLLED

THE INFORMATION CONTAINED IN THIS DRAWING IS THE SOLE PROPERTY OF APICAL INDUSTRIES DBA DART AEROSPACE. ANY REPRODUCTION IN PART OR WHOLE WITHOUT THE WRITTEN PERMISSION OF APICAL INDUSTRIES DBA DART AEROSPACE IS PROHIBITED.

PK1

.5916	.5915	.5914	.5913	.5912	.5911	.5910	.5909	.5908	.5907	.5906	.5905	.5904	.5903	.5902	.5901	F/N	P/N	DESCRIPTION	MAT'L	SPEC
1	1															74	650.6520	ANGLED FITTING ADAPTER		
		1														73	601.4393	DUST CAP		
	1	1	1													72	654.6514	FLARELESS DIFFUSER CAP -4		
	1															71	601.4370	THERMOMANOMETER		
1	1															70	601.4403	90 DEGREE GAUGE ADAPTER		
	1	1	1													69	650.6216	BANJO -4 FLARELESS		
	1	1	1													68	650.6410	SAFETY DISC RETAINER (6K)		
1			1	1	1	1	1	1	1	1	1	1	1	1	1	67	601.3739	PRESSURE GAUGE		
A/R	A/R	A/R	A/R	A/R	A/R	A/R	A/R	A/R	A/R	A/R	A/R	A/R	A/R	A/R	A/R	66	MS20995C20	SAFETY WIRE		
				1	1	1	1	1	1							65	650.6515	EXTENDED GAUGE ADAPTER		
																64	DELETED			
1	1	1	1	1	1	1	1	1	1	1	1	1	1	1	1	63	M83461/2-906	O-RING		
2	2	1	1	3	1	1	3	1	1	3	1	1	3	1	1	62	M83461/2-904	O-RING		
				1	1	1				1	1	1				61	600.0249	SAFETY DISC		
																60	DELETED			
																59	DELETED			
1							1	1	1				1	1	1	58	601.2413	SAFETY DISC RETAINER		
1	1	1	1	1	1	1	1	1	1	1	1	1	1	1	1	57	601.2173	SAFETY PIN		
				1			1			1			1			56	654.6512	DIFFUSER CAP -8		
					1			1			1			1		55	654.6511	DIFFUSER CAP -6		
1						1			1			1			1	54	654.6510	DIFFUSER CAP -4		
A/R	A/R	A/R	A/R	A/R	A/R	A/R	A/R	A/R	A/R	A/R	A/R	A/R	A/R	A/R	A/R	53	600.0903	LOCTITE RETAINING COMPOUND	LOCTITE 222MS	
A/R	A/R	A/R	A/R	A/R	A/R	A/R	A/R	A/R	A/R	A/R	A/R	A/R	A/R	A/R	A/R	52	601.1928	TORQUE SEAL	F-925 SKYDROL RES.	
2	2	2	2	2	2	2	2	2	2	2	2	2	2	2	2	51	M83461/2-910	O-RING		
A/R	A/R	A/R	A/R	A/R	A/R	A/R	A/R	A/R	A/R	A/R	A/R	A/R	A/R	A/R	A/R	50	601.2974	STAINLESS STEEL ANITSEIZE	MIL-A-907	
A/R	A/R	A/R	A/R	A/R	A/R	A/R	A/R	A/R	A/R	A/R	A/R	A/R	A/R	A/R	A/R	49	600.1044	O-RING GREASE/LUBRICANT	KRYTOX 240AZ	
		1														48	601.4331	PRESSURE TRANSDUCER		
4	4	4	4	4	4	4	4	4	4	4	4	4	4	4	4	47	M83461/2-908	O-RING		
				1			1			1			1			46	650.6302	SWIVEL FITTING		
1	1	1	1	1	1	1	1	1	1	1	1	1	1	1	1	45	MS35650-364	NUT		
				1			1			1			1			44	650.6212	BANJO -8		
					1			1			1			1		43	650.6211	BANJO -6		
1						1			1			1			1	42	650.6210	BANJO -4		
1	1	1	1	1	1	1	1	1	1	1	1	1	1	1	1	41	601.2953	O-RING		
2	2	2	2	2	2	2	2	2	2	2	2	2	2	2	2	40	NAS1352C06-16	SOCKET HEAD CAP SCREW		
6	6	6	6	6	6	6	6	6	6	6	6	6	6	6	6	39	NAS1352C06-12	SOCKET HEAD CAP SCREW		
1	1	1	1	1	1	1	1	1	1	1	1	1	1	1	1	38	MS28775-022	O-RING		
1	1	1	1	1	1	1	1	1	1	1	1	1	1	1	1	37	600.0339	BAYONET SPRING		

QTY

PARTS LIST

NEXT ASSY (S)
646.7400
646.7500
650.2300

ORIGINAL DATE (MO-DA-YR) 01-22-07
DRAWN BY E. ANDERSSON
CHECKER P. BRAVO
DRAWING APPROVAL P. BRAVO 01-22-07
CONTRACT No.

UNLESS OTHERWISE SPECIFIED DIMENSIONS ARE IN INCHES
TOLERANCES ARE:
2 PLACE DECIMALS ±.01
3 PLACE DECIMALS ±.005
ANGLES ± .5°

DART AEROSPACE
APICAL INDUSTRIES, INC. dba DART AEROSPACE
3030 ENTERPRISE CT., SUITE A
VISTA, CA. 92081
(760)-724-5300

VALVE ASSEMBLY

SIZE B | CAGE CODE 07MZ6 | DWG. NO. 645.5900 | REV. PK1

SCALE NONE

Released on 8/18/2021

PRINTED COPY OF THIS DOCUMENT IS FOR REFERENCE ONLY AND IS UNCONTROLLED

THE INFORMATION CONTAINED IN THIS DRAWING IS THE SOLE PROPERTY OF APICAL INDUSTRIES DBA DART AEROSPACE. ANY REPRODUCTION IN PART OR WHOLE WITHOUT THE WRITTEN PERMISSION OF APICAL INDUSTRIES DBA DART AEROSPACE IS PROHIBITED.

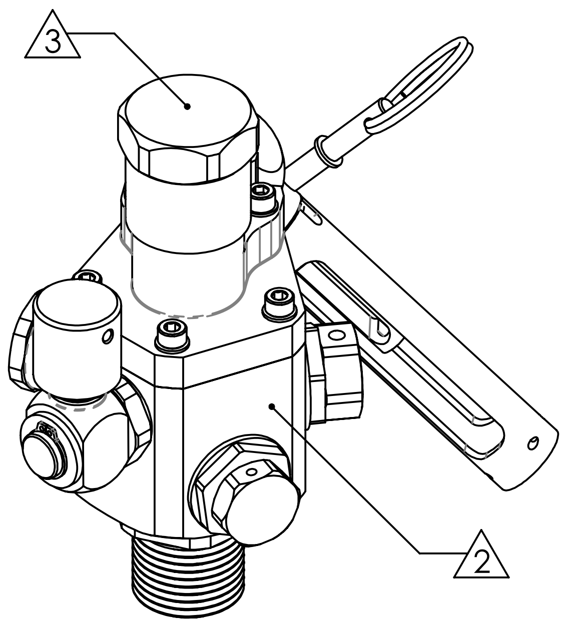

645.59XX-YYY-ZZZ-AA(-BBB)
(**XX** IS THE ROOT DRAWING NUMBER)
(REFER TO TABLE 1 FOR DASH NUMBER DESIGNATIONS)
(645.5901-045-144-08 SHOWN)

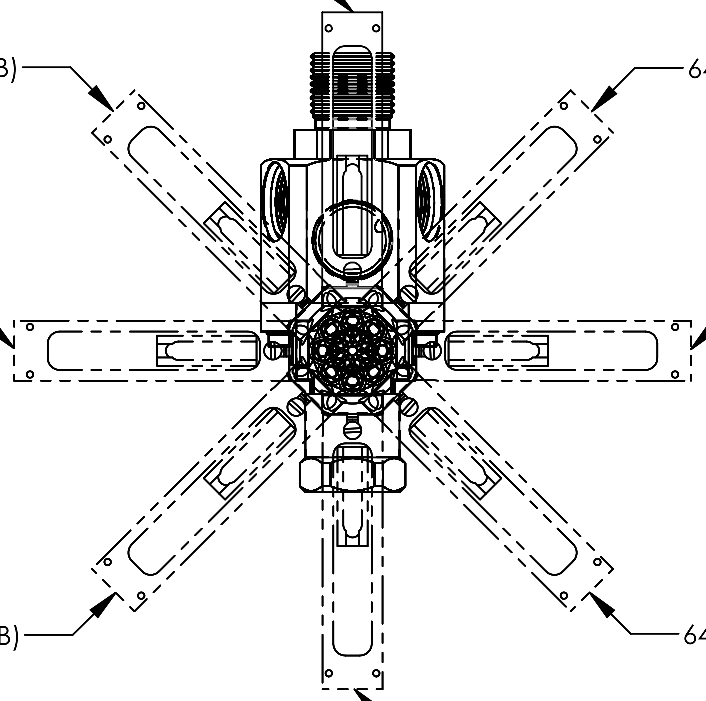

ANGLE OF PULL CABLE HOUSING
645.59XX-**YYY**-ZZZ-AA(-BBB)
(RELATIVE TO VALVE BODY)

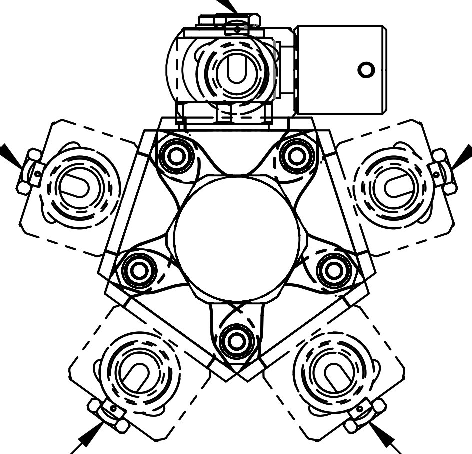

ANGLE OF BAYONET HOUSING
645.59XX-YYY-**ZZZ**-AA(-BBB)
(RELATIVE TO OUTLET PORT)

TABLE 1

DASH NUMBER	DESIGNATION
YYY	ANGLE OF PULL CABLE HOUSING
ZZZ	ANGLE OF BAYONET HOUSING
AA	PORT POSITION CODE
BBB	ANGLE OF GAUGE/THERMOMANOMETER (APPLICABLE TO 645.5915/.5916 CONFIGURATIONS ONLY)

ORIGINAL DATE (MO-DA-YR) 01-22-07	DART AEROSPACE, APICAL INDUSTRIES, INC. dba DART AEROSPACE, 3030 ENTERPRISE CT., SUITE A, VISTA, CA. 92081, (760)-724-5300
DRAWN BY E. ANDERSSON / CHECKER P. BRAVO	
DRAWING APPROVAL P. BRAVO 01-22-07	
CONTRACT No.	VALVE ASSEMBLY
UNLESS OTHERWISE SPECIFIED DIMENSIONS ARE IN INCHES TOLERANCES ARE: 2 PLACE DECIMALS ±.01, 3 PLACE DECIMALS ±.005, ANGLES ± .5°	SIZE B / CAGE CODE 07MZ6 / DWG. NO. 645.5900 / REV. PK1
	SCALE NONE / SHEET 4 OF 10

Released on 8/18/2021

PRINTED COPY OF THIS DOCUMENT IS FOR REFERENCE ONLY AND IS UNCONTROLLED

THE INFORMATION CONTAINED IN THIS DRAWING IS THE SOLE PROPERTY OF APICAL INDUSTRIES DBA DART AEROSPACE. ANY REPRODUCTION IN PART OR WHOLE WITHOUT THE WRITTEN PERMISSION OF APICAL INDUSTRIES DBA DART AEROSPACE IS PROHIBITED.

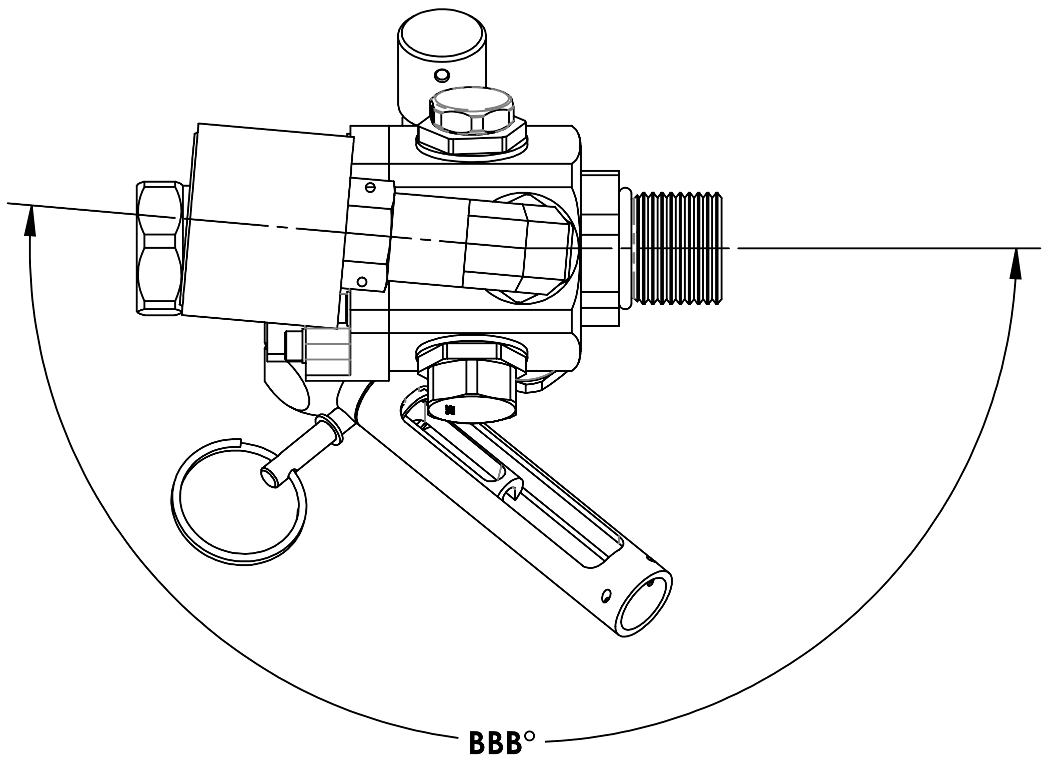

ANGLE OF GAUGE/THERMOMANOMETER

645.59XX-YYY-ZZZ-AA-**BBB**

(645.5915-315-288-24-185 SHOWN)

(RELATIVE TO VALVE BODY)

TABLE 2

PORT POSITION CODE (AA)	POSITION 1	POSITION 2	POSITION 3	POSITION 4
01	GAUGE	FILL FITTING	BURST	THERMAL
02	GAUGE	FILL FITTING	THERMAL	BURST
03	GAUGE	THERMAL	BURST	FILL FITTING
04	GAUGE	THERMAL	FILL FITTING	BURST
05	GAUGE	BURST	THERMAL	FILL FITTING
06	GAUGE	BURST	FILL FITTING	THERMAL
07	FILL FITTING	GAUGE	BURST	THERMAL
08	FILL FITTING	GAUGE	THERMAL	BURST
09	FILL FITTING	THERMAL	BURST	GAUGE
10	FILL FITTING	THERMAL	GAUGE	BURST
11	FILL FITTING	BURST	THERMAL	GAUGE
12	FILL FITTING	BURST	GAUGE	THERMAL
13	THERMAL	FILL FITTING	BURST	GAUGE
14	THERMAL	FILL FITTING	GAUGE	BURST
15	THERMAL	BURST	FILL FITTING	GAUGE
16	THERMAL	BURST	GAUGE	FILL FITTING
17	THERMAL	GAUGE	BURST	FILL FITTING
18	THERMAL	GAUGE	FILL FITTING	BURST
19	BURST	FILL FITTING	GAUGE	THERMAL
20	BURST	FILL FITTING	THERMAL	GAUGE
21	BURST	THERMAL	GAUGE	FILL FITTING
22	BURST	THERMAL	FILL FITTING	GAUGE
23	BURST	GAUGE	FILL FITTING	THERMAL
24	BURST	GAUGE	THERMAL	FILL FITTING

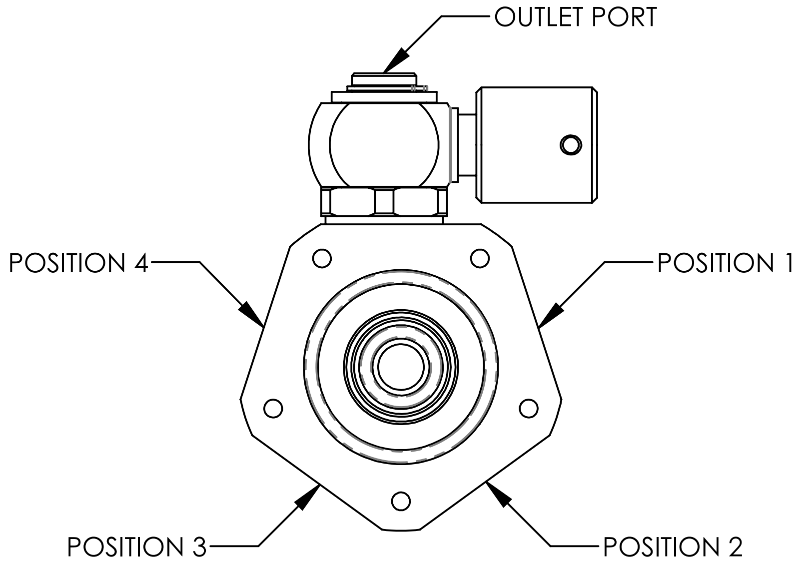

PORT POSITION CODE

645.59XX-YYY-ZZZ-**AA**(-BBB)

(REFER TO TABLE 2 FOR PORT POSITION CODES)

(RELATIVE TO OUTLET PORT)

ORIGINAL DATE (MO-DA-YR) 01-22-07	DART AEROSPACE — APICAL INDUSTRIES, INC. dba DART AEROSPACE — 3030 ENTERPRISE CT., SUITE A, VISTA, CA. 92081, (760)-724-5300
DRAWN BY E. ANDERSSON / CHECKER P. BRAVO	
DRAWING APPROVAL P. BRAVO 01-22-07	
CONTRACT No.	VALVE ASSEMBLY
UNLESS OTHERWISE SPECIFIED DIMENSIONS ARE IN INCHES TOLERANCES ARE: 2 PLACE DECIMALS ±.01 3 PLACE DECIMALS ±.005 ANGLES ± .5°	SIZE B / CAGE CODE 07MZ6 / DWG. NO. 645.5900 / REV. PK1
	SCALE NONE / SHEET 5 OF 10

Released on 8/18/2021

PRINTED COPY OF THIS DOCUMENT IS FOR REFERENCE ONLY AND IS UNCONTROLLED

THE INFORMATION CONTAINED IN THIS DRAWING IS THE SOLE PROPERTY OF APICAL INDUSTRIES DBA DART AEROSPACE. ANY REPRODUCTION IN PART OR WHOLE WITHOUT THE WRITTEN PERMISSION OF APICAL INDUSTRIES DBA DART AEROSPACE IS PROHIBITED.

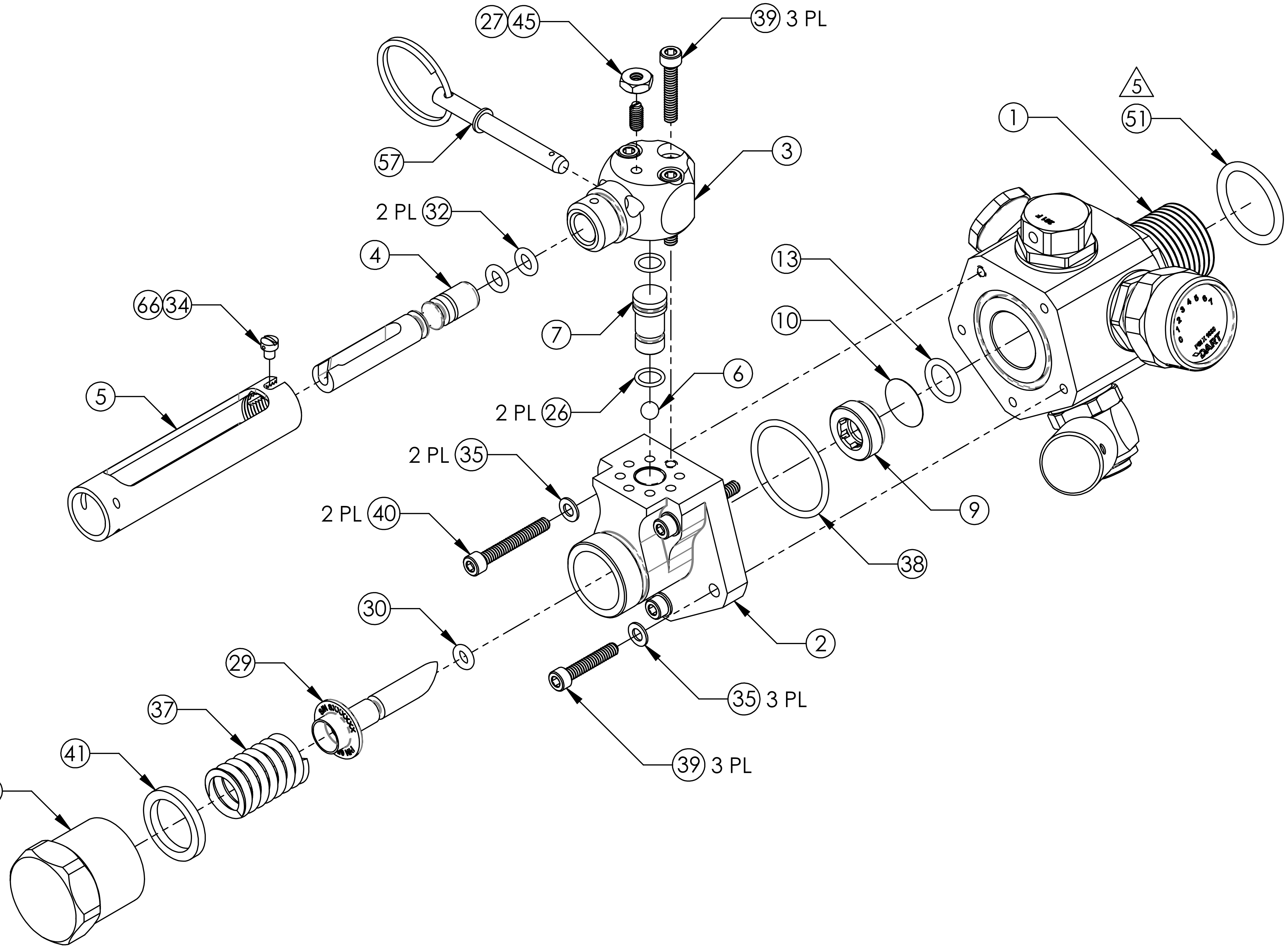

TYPICAL INTERNAL COMPONENTS, PULL CABLE COMPONENTS AND M83461/2-910 O-RING INSTALLATION

(ALL CONFIGURATIONS)

ORIGINAL DATE (MO-DA-YR) 01-22-07		DART AEROSPACE APICAL INDUSTRIES, INC. dba DART AEROSPACE 3030 ENTERPRISE CT., SUITE A VISTA, CA. 92081 (760)-724-5300
DRAWN BY E. ANDERSSON	CHECKER P. BRAVO	
DRAWING APPROVAL P. BRAVO 01-22-07		
CONTRACT No.		VALVE ASSEMBLY
UNLESS OTHERWISE SPECIFIED DIMENSIONS ARE IN INCHES TOLERANCES ARE: 2 PLACE DECIMALS ±.01 3 PLACE DECIMALS ±.005 ANGLES ± .5°		SIZE B · CAGE CODE 07MZ6 · DWG. NO. 645.5900 · REV. PK1 SCALE NONE · SHEET 6 OF 10

Released on 8/18/2021

PRINTED COPY OF THIS DOCUMENT IS FOR REFERENCE ONLY AND IS UNCONTROLLED

THE INFORMATION CONTAINED IN THIS DRAWING IS THE SOLE PROPERTY OF APICAL INDUSTRIES DBA DART AEROSPACE. ANY REPRODUCTION IN PART OR WHOLE WITHOUT THE WRITTEN PERMISSION OF APICAL INDUSTRIES DBA DART AEROSPACE IS PROHIBITED.

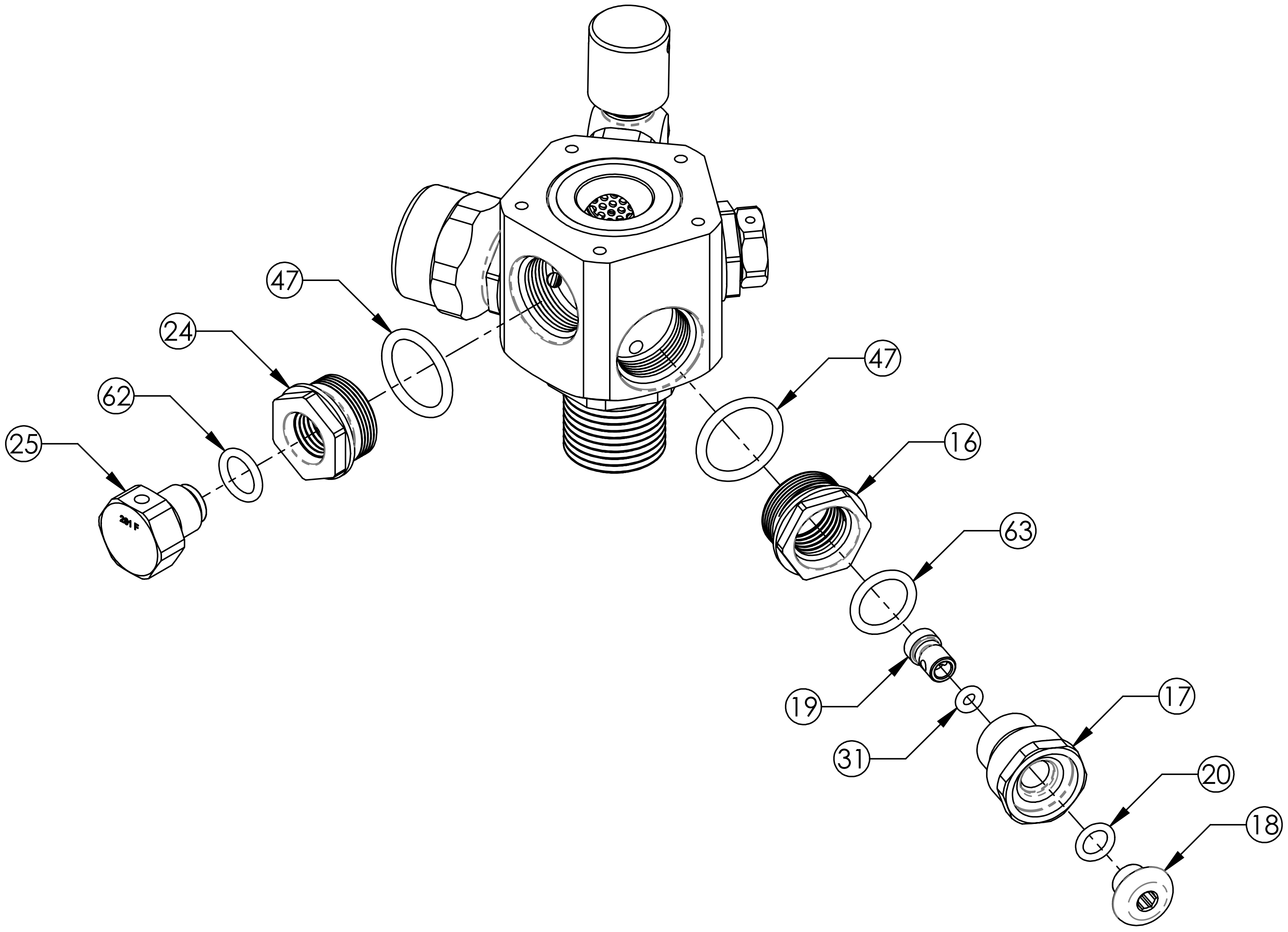

TYPICAL FILL FITTING AND FUSIBLE PLUG INSTALLTION

(INTERNAL AND PULL CABLE COMPONENTS HIDDEN FOR CLARITY)

(ALL CONFIGURATIONS)

ORIGINAL DATE (MO-DA-YR) 01-22-07	DART AEROSPACE — APICAL INDUSTRIES, INC. dba DART AEROSPACE — 3030 ENTERPRISE CT., SUITE A, VISTA, CA. 92081 (760)-724-5300
DRAWN BY E. ANDERSSON / CHECKER P. BRAVO	
DRAWING APPROVAL P. BRAVO 01-22-07	
CONTRACT No.	VALVE ASSEMBLY
UNLESS OTHERWISE SPECIFIED DIMENSIONS ARE IN INCHES TOLERANCES ARE: 2 PLACE DECIMALS ±.01 3 PLACE DECIMALS ±.005 ANGLES ± .5°	SIZE B — CAGE CODE 07MZ6 — DWG. NO. 645.5900 — REV. PK1
	SCALE NONE — SHEET 7 OF 10

Released on 8/18/2021

PRINTED COPY OF THIS DOCUMENT IS FOR REFERENCE ONLY AND IS UNCONTROLLED

THE INFORMATION CONTAINED IN THIS DRAWING IS THE SOLE PROPERTY OF APICAL INDUSTRIES DBA DART AEROSPACE. ANY REPRODUCTION IN PART OR WHOLE WITHOUT THE WRITTEN PERMISSION OF APICAL INDUSTRIES DBA DART AEROSPACE IS PROHIBITED.

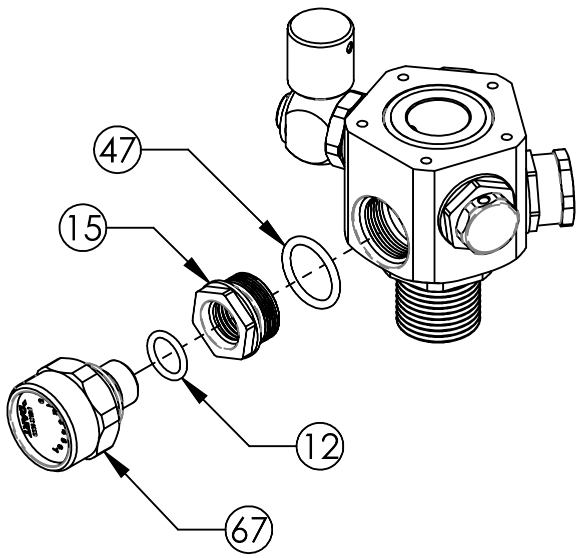

TYPICAL GAUGE INSTALLATION
(INTERNAL AND PULL CABLE COMPONENTS HIDDEN FOR CLARITY)
(APPLICABLE TO 645.5901-645.5906 AND 645.5913 CONFIGURATIONS)

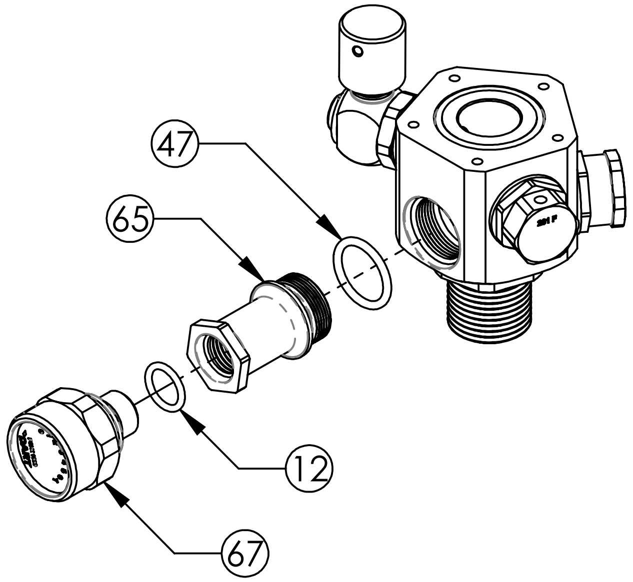

TYPICAL EXTENDED GAUGE INSTALLATION
(INTERNAL AND PULL CABLE COMPONENTS HIDDEN FOR CLARITY)
(APPLICABLE TO 645.5907-645.5912 CONFIGURATIONS)

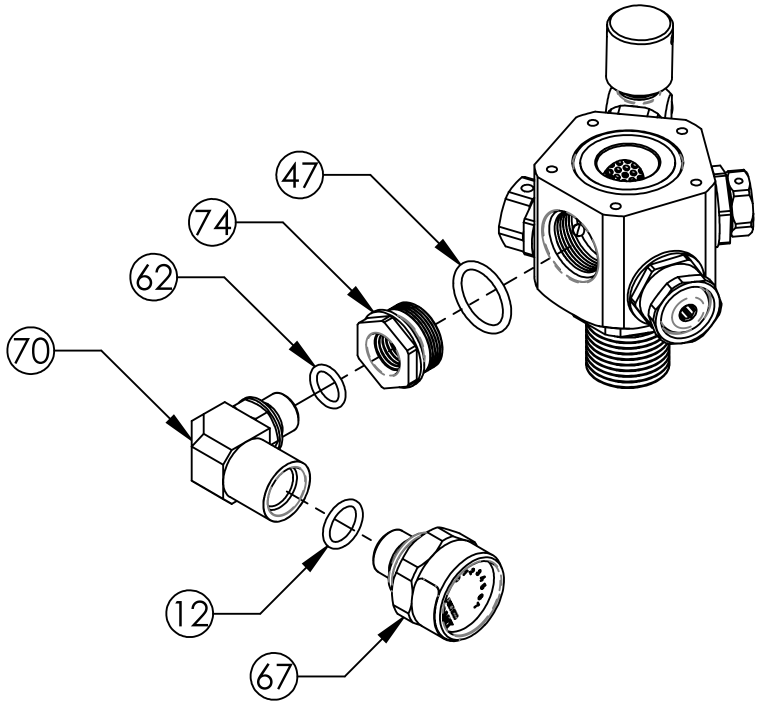

TYPICAL ANGLED GAUGE INSTALLATION
(INTERNAL AND PULL CABLE COMPONENTS HIDDEN FOR CLARITY)
(APPLICABLE TO 645.5916 CONFIGURATION)

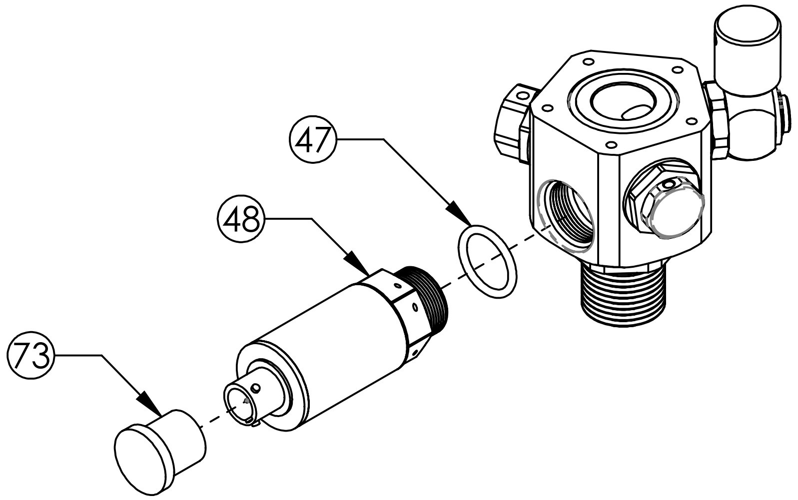

PRESSURE TRANSDUCER INSTALLATION
(INTERNAL AND PULL CABLE COMPONENTS HIDDEN FOR CLARITY)
(APPLICABLE TO 645.5914 CONFIGURATION)

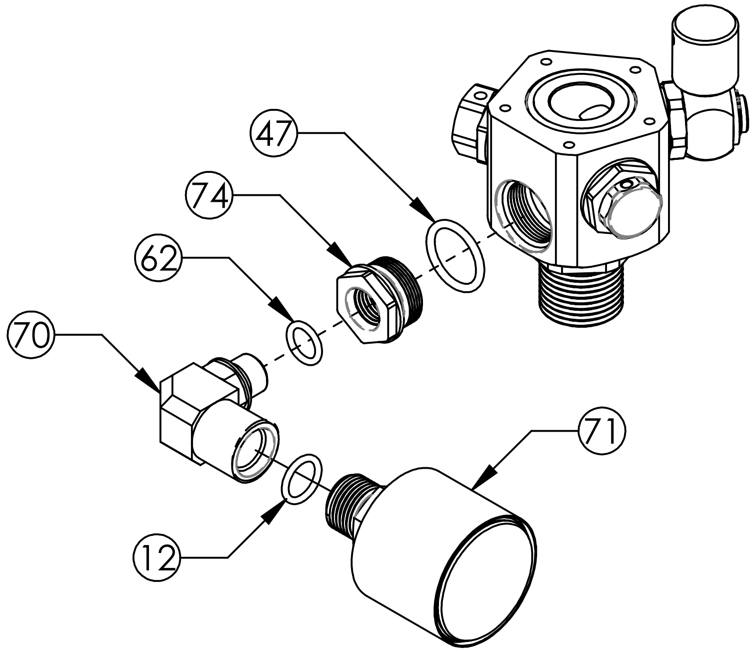

THERMOMANOMETER INSTALLATION
(INTERNAL AND PULL CABLE COMPONENTS HIDDEN FOR CLARITY)
(APPLICABLE TO 645.5915 CONFIGURATION)

ORIGINAL DATE (MO-DA-YR) 01-22-07	DART AEROSPACE, APICAL INDUSTRIES, INC. dba DART AEROSPACE, 3030 ENTERPRISE CT., SUITE A, VISTA, CA. 92081, (760)-724-5300
DRAWN BY E. ANDERSSON / CHECKER P. BRAVO	
DRAWING APPROVAL P. BRAVO 01-22-07	
CONTRACT No.	VALVE ASSEMBLY
UNLESS OTHERWISE SPECIFIED DIMENSIONS ARE IN INCHES TOLERANCES ARE: 2 PLACE DECIMALS ±.01, 3 PLACE DECIMALS ±.005, ANGLES ± .5°	SIZE B / CAGE CODE 07MZ6 / DWG. NO. 645.5900 / REV. PK1
	SCALE NONE / SHEET 8 OF 10

Released on 8/18/2021

THE INFORMATION CONTAINED IN THIS DRAWING IS THE SOLE PROPERTY OF APICAL INDUSTRIES DBA DART AEROSPACE. ANY REPRODUCTION IN PART OR WHOLE WITHOUT THE WRITTEN PERMISSION OF APICAL INDUSTRIES DBA DART AEROSPACE IS PROHIBITED.

PRINTED COPY OF THIS DOCUMENT IS FOR REFERENCE ONLY AND IS UNCONTROLLED

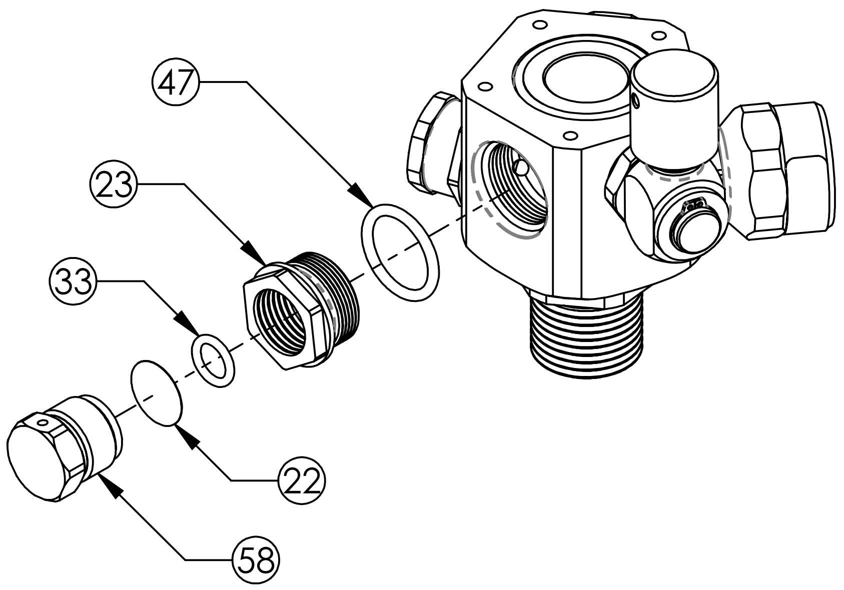

TYPICAL 601.2413 SAFETY DISC RETAINER INSTALLATION
(INTERNAL AND PULL CABLE COMPONENTS HIDDEN FOR CLARITY)
(APPLICABLE TO 645.5901-645.5903, 645.5907-645.5909, AND 645.5916 CONFIGURATIONS)

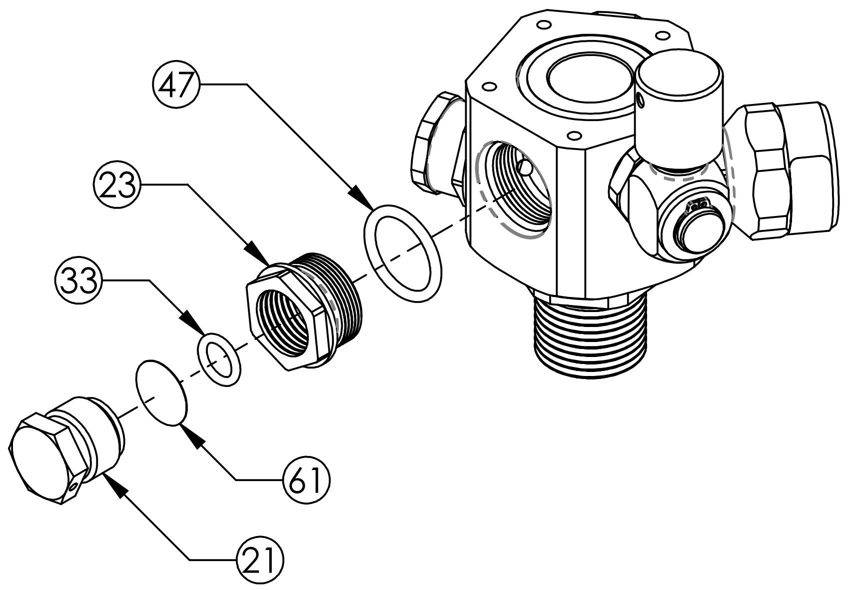

TYPICAL 600.0250 SAFETY DISC RETAINER INSTALLATION
(INTERNAL AND PULL CABLE COMPONENTS HIDDEN FOR CLARITY)
(APPLICABLE TO 645.5904-645.5906 AND 645.5910-645.5912 CONFIGURATIONS)

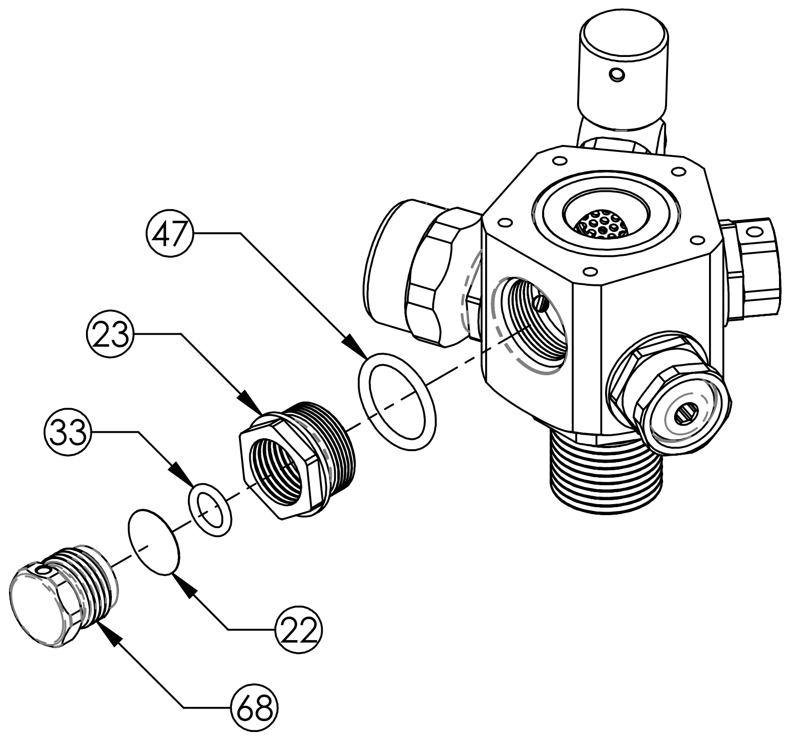

TYPICAL 650.6410 SAFETY DISC RETAINER INSTALLATION
(INTERNAL AND PULL CABLE COMPONENTS HIDDEN FOR CLARITY)
(APPLICABLE TO 645.5913-645.5915 CONFIGURATIONS)

ORIGINAL DATE (MO-DA-YR) 01-22-07	DART AEROSPACE APICAL INDUSTRIES, INC. dba DART AEROSPACE 3030 ENTERPRISE CT., SUITE A VISTA, CA. 92081 (760)-724-5300
DRAWN BY E. ANDERSSON / CHECKER P. BRAVO	
DRAWING APPROVAL P. BRAVO 01-22-07	
CONTRACT No.	VALVE ASSEMBLY
UNLESS OTHERWISE SPECIFIED DIMENSIONS ARE IN INCHES TOLERANCES ARE: 2 PLACE DECIMALS ±.01 3 PLACE DECIMALS ±.005 ANGLES ± .5°	SIZE B / CAGE CODE 07MZ6 / DWG. NO. 645.5900 / REV. PK1 SCALE NONE / SHEET 9 OF 10

Released on 8/18/2021

PRINTED COPY OF THIS DOCUMENT IS FOR REFERENCE ONLY AND IS UNCONTROLLED

THE INFORMATION CONTAINED IN THIS DRAWING IS THE SOLE PROPERTY OF APICAL INDUSTRIES DBA DART AEROSPACE. ANY REPRODUCTION IN PART OR WHOLE WITHOUT THE WRITTEN PERMISSION OF APICAL INDUSTRIES DBA DART AEROSPACE IS PROHIBITED.

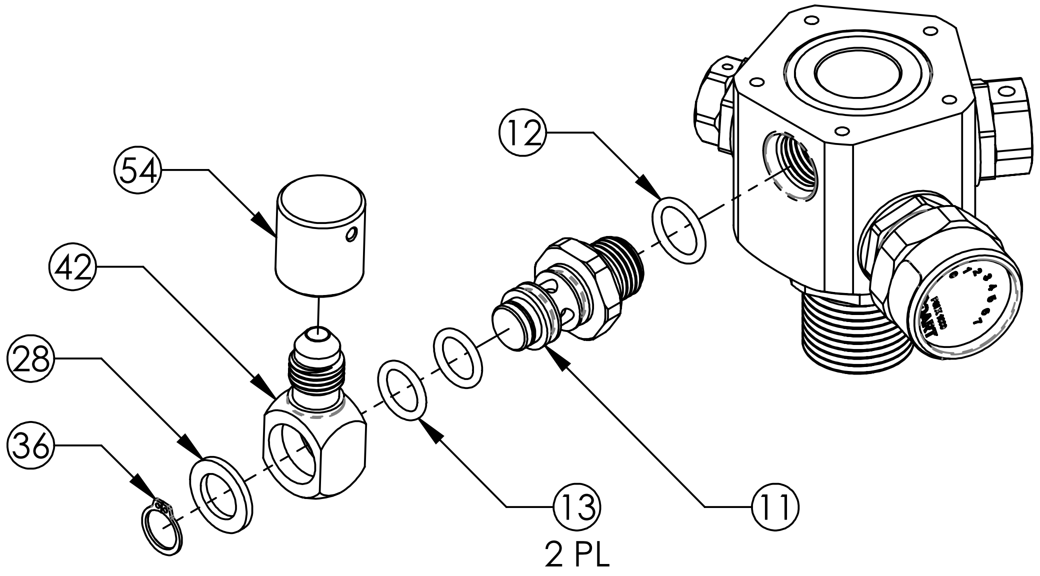

TYPICAL -4 OUTLET INSTALLATION

(INTERNAL AND PULL CABLE COMPONENTS HIDDEN FOR CLARITY)
(APPLICABLE TO 645.5901/.5904/.5907/.5910/.5916 CONFIGURATIONS)

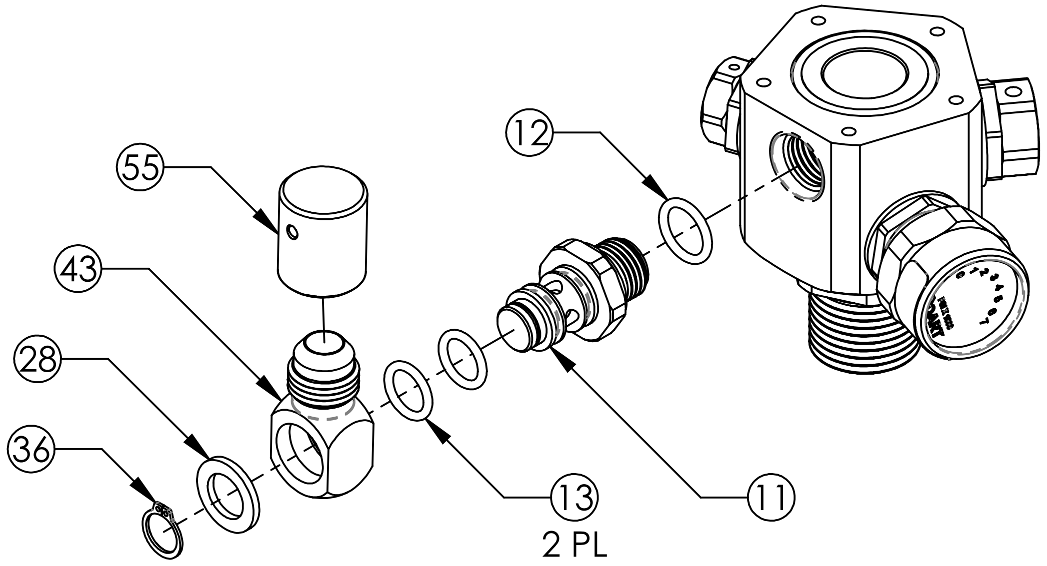

TYPICAL -6 OUTLET INSTALLATION

(INTERNAL AND PULL CABLE COMPONENTS HIDDEN FOR CLARITY)
(APPLICABLE TO 645.5902/.5905/.5908/.5911 CONFIGURATIONS)

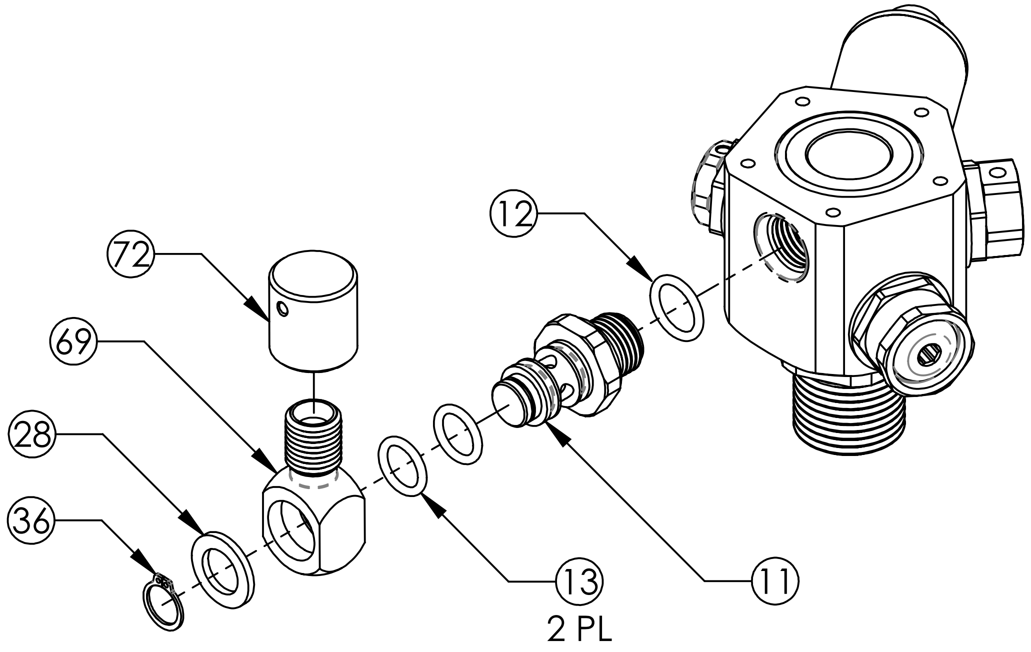

TYPICAL -4 FLARELESS OUTLET INSTALLATION

(INTERNAL AND PULL CABLE COMPONENTS HIDDEN FOR CLARITY)
(APPLICABLE TO 645.5913-645.5915 CONFIGURATIONS)

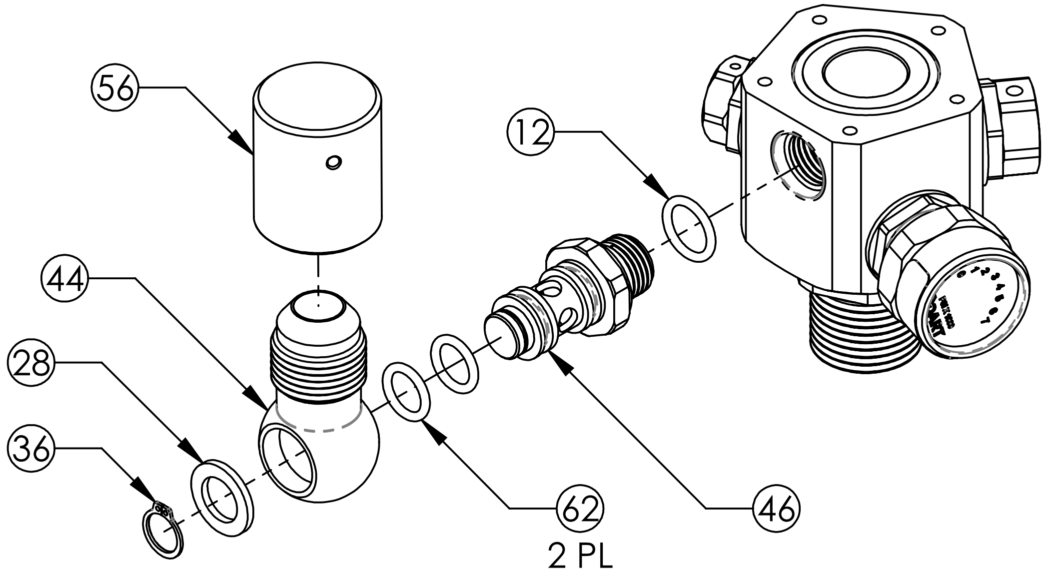

TYPICAL -8 OUTLET INSTALLATION

(INTERNAL AND PULL CABLE COMPONENTS HIDDEN FOR CLARITY)
(APPLICABLE TO 645.5903/.5906/.5909/.5912 CONFIGURATIONS)

ORIGINAL DATE (MO-DA-YR) 01-22-07	DART AEROSPACE APICAL INDUSTRIES, INC. dba DART AEROSPACE 3030 ENTERPRISE CT., SUITE A VISTA, CA. 92081 (760)-724-5300
DRAWN BY E. ANDERSSON / CHECKER P. BRAVO	
DRAWING APPROVAL P. BRAVO 01-22-07	
CONTRACT No.	VALVE ASSEMBLY
UNLESS OTHERWISE SPECIFIED DIMENSIONS ARE IN INCHES TOLERANCES ARE: 2 PLACE DECIMALS ±.01 3 PLACE DECIMALS ±.005 ANGLES ± .5°	SIZE B / CAGE CODE 07MZ6 / DWG. NO. 645.5900 / REV. PK1 SCALE NONE / SHEET 10 OF 10